MC4 SAFETY MAT CONTROLLER/POWER SUPPLY

ACAD FILE: CAT-20301D.DWG

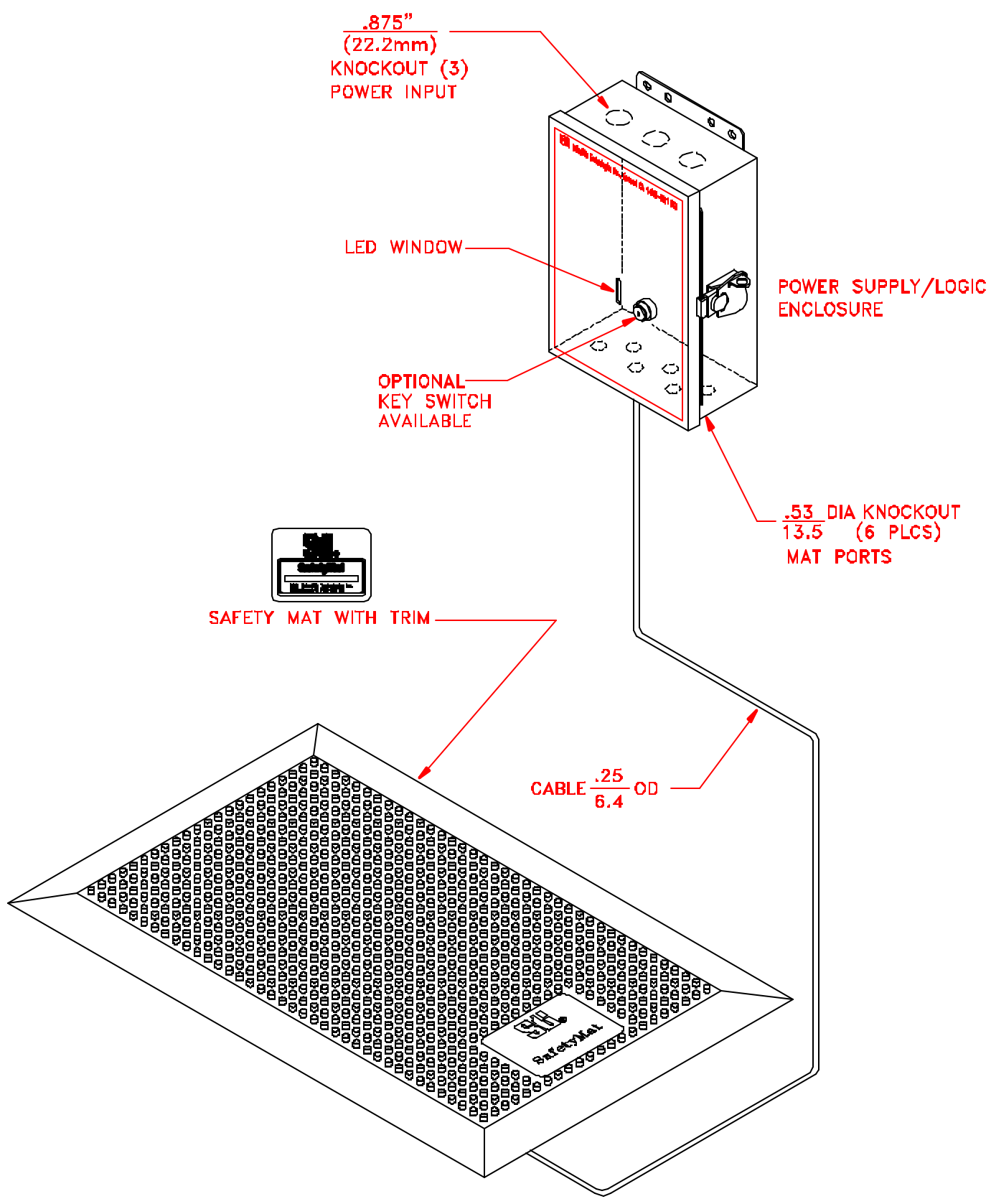

TWO-DIMENSIONAL
ISOMETRIC VIEW

MC4 SAFETY MAT CONTROLLER (POWER SUPPLY/ LOGIC) ENCLOSURE BOX

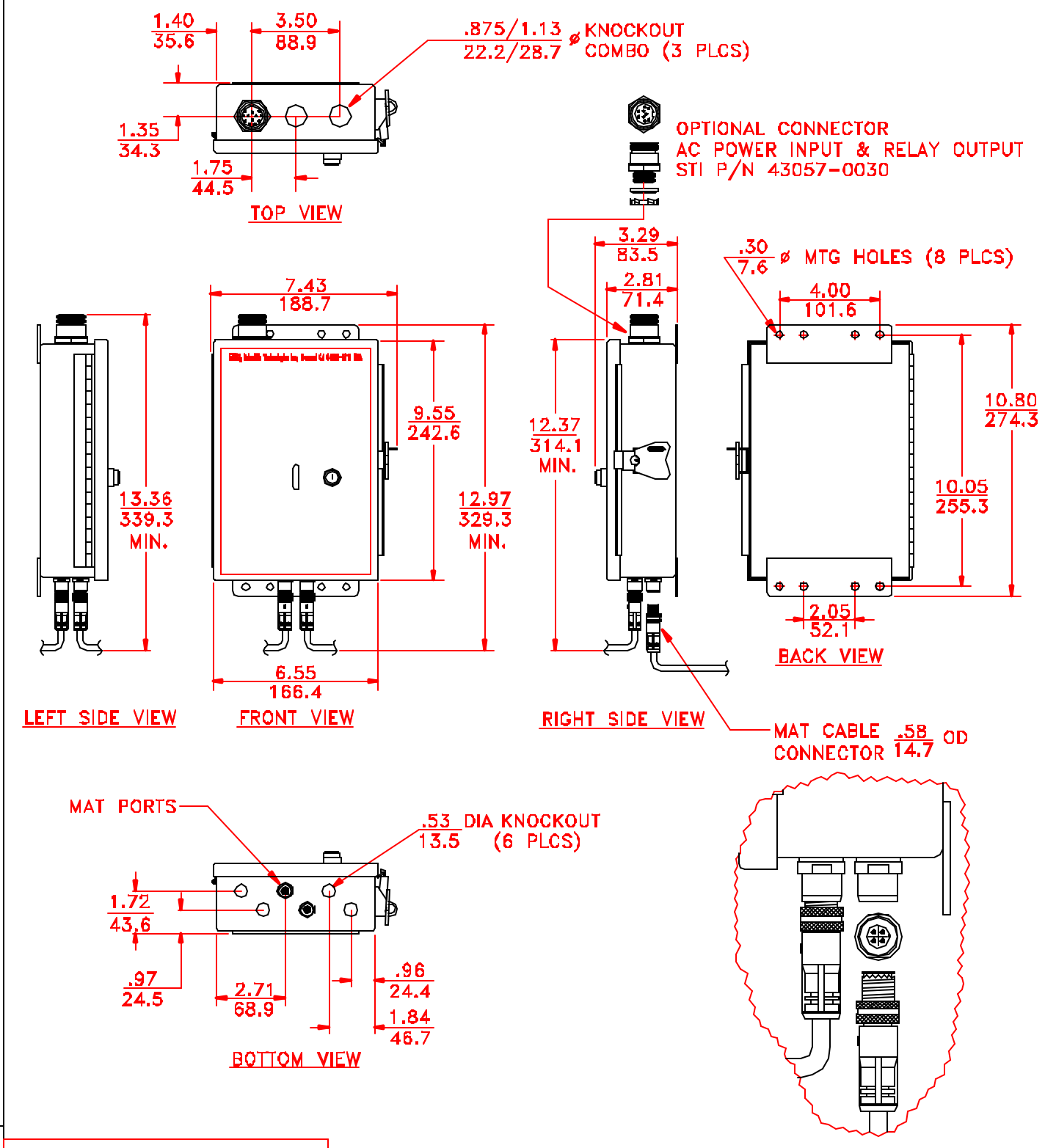

DIMENSIONS: INCHES (+\-.01) / mm (+\-.3)

STI ENCLOSURE BOX PART No: 14545-0020